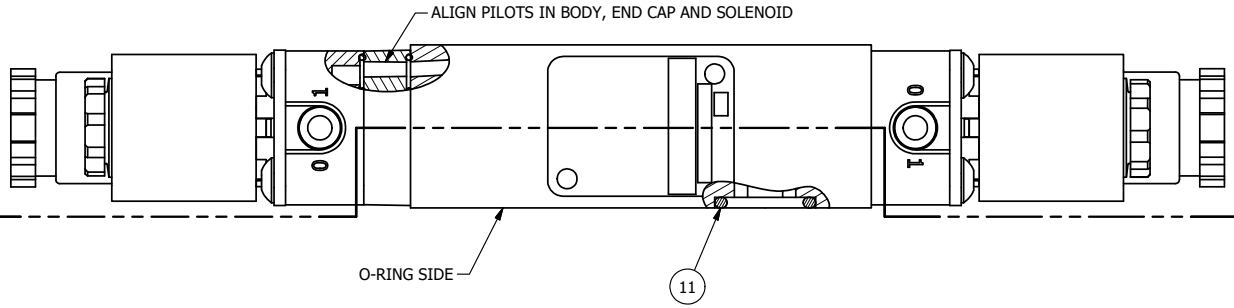

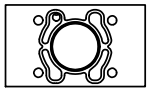

POSITION GASKET AND AY-EMY3G ON END OF VALVE TO ALIGN PILOT HOLES (SIDE 'B' ONLY)

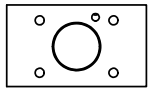

POSITION GASKET ON END OF VALVE BETWEEN BODY OR AY-EMY3G AND SOLENOID OPERATOR BOTH SIDES (SIDE 'A' SHOWN)

NOTES:
1) ALWAYS GIVE VALVE MODEL AND PART NUMBER WHEN ORDERING PARTS.

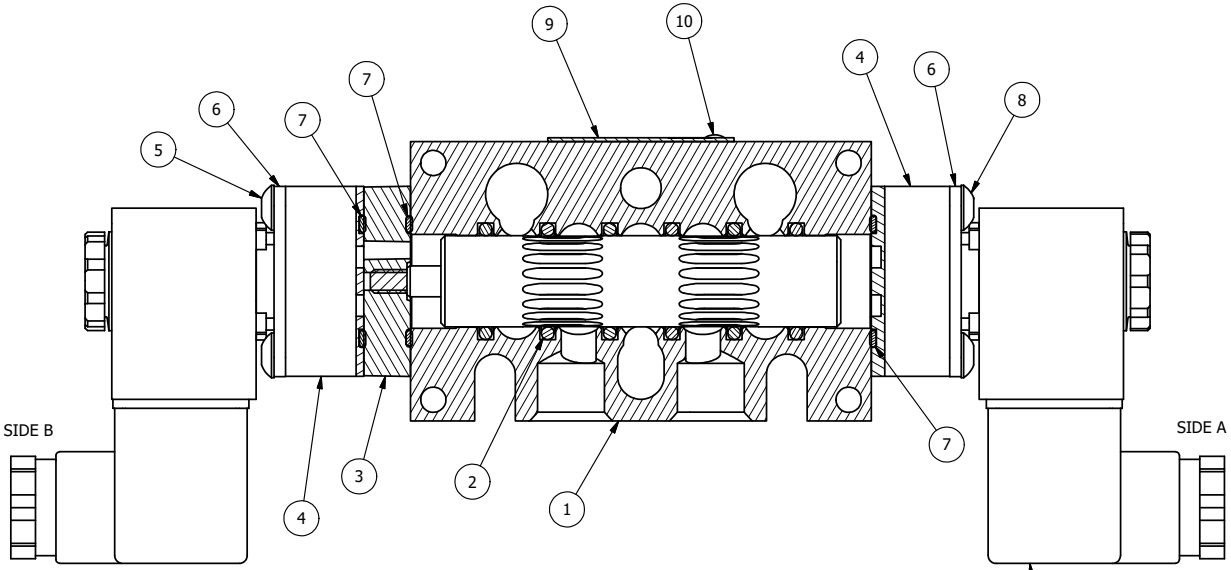

SECTION A-A
SCALE 1 : 1

3/8" CORD GRIP DIN CAP INCLUDED FORM A, ACC. TO EN 175301-803, ISO 4400

FLG	QTY	PART NO	DESCRIPTION
11	3	V-110	O-RING, BUNA-N, 70 DURO, AS-114, (REF 5/8 X 13/16 X 3/32), 1/4" SLEEVE, 1/2" SUB, STACK
10	2	V-212	SCREW, #2 X 3/16 DRIVE, TYPE U, OVAL HEAD, STAINLESS STEEL
9	1	AN-114	NAMEPLATE, BLANK, FOR VALVES WITH SPRINGS OR DETENTS
8	4	V-584	SCREW, 10-24 X 1, BUTTON HEAD SOCKET CAP WITH MICROSPHERE APPLIED TO THREADS.
7	3	EMG3	GASKET - END MOUNT SOLENOID, BUNA-N, 1/4" & 3/8" VALVES
6	2	SEC3-7	PLATE, RE-INFORCEMENT, SOLENOID, STAMPED, 304 STAINLESS
5	4	V-601	SCREW, 10-24 X 1-1/2, BUTTON HEAD SOCKET CAP WITH MICROSPHERE ADHESIVE
4	2	V-564	SYSTEM 8 INTRINSICALLY SAFE SOLENOID OPERATOR.
3	1	AY-EMY3G	ASSY - SPR CTR, OPEN CTR SPL, END MOUNT SOLENOID, 1/4" & 3/8" VALVES
2	6	V-39	O-RING, VITON, STD BODY, 1/4" & 3/8" VALVES
1	1	B3-10E	FINISHED - SOLID BODY, UPPER PILOTS, 3/8" STACKING VALVE

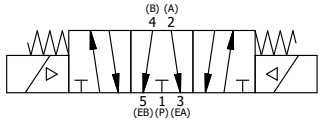

A	6/1/2018	ECG3 GASKET TO EMG3, SPL ASSY TO AY-EMY3G.
NO.	DATE	REVISION

LIMITS ON DIMENSIONS UNLESS OTHERWISE SPECIFIED
2-PL DECIMAL ± .01
3-PL DECIMAL ± .005
FRACTIONAL ± 1/64
ANGULAR ± 1/2'

AAA PRODUCTS INTERNATIONAL
7114 Harry Hines Blvd
Dallas, TX 75235

DRAWN: RMcKenna	DATE: 11/3/2015	CHECKED: KWaite	DATE: 11/3/2015
SCALE: 1 : 1	SHEET: 1 OF 1	RELEASED: HWomack	DATE: 11/3/2015

TITLE: 3/8" STACK, DBL SOL, 3 POS, SPR CTR, SOL SHFT, FLOAT CTR SPL, INTRINSICALLY SAFE, 24VDC

PART NO.: EBSY3GA 24VDC

REV.: A

THE INFORMATION CONTAINED WITHIN THIS DOCUMENT IS PROPRIETARY TO AAA PRODUCTS AND MAY NOT BE DISCLOSED WITHOUT PRIOR WRITTEN CONSENT

D:\Engineering\Product\Valve\Assembly\Standard\SOV\DWG\EBSY3GA 24VDC.dw